2. Front Exhaust Pipe

A: REMOVAL

CAUTION:
Be careful not to burn yourself, because the exhaust pipe becomes extremely hot after running.

1) Set the vehicle on a lift.
2) Disconnect the ground cable from the battery.

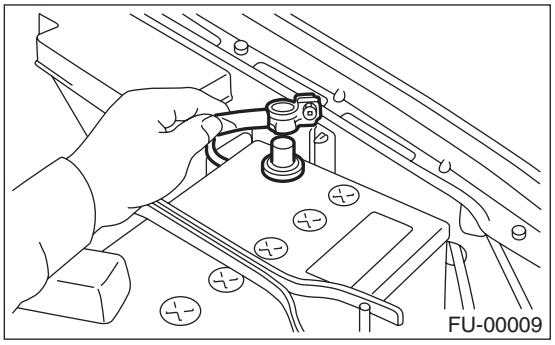

3) Remove the front oxygen (A/F) sensor. <Ref. to FU(H4DOTC)-46, REMOVAL, Front Oxygen (A/F) Sensor.>
4) Remove the under cover.
5) Remove the exhaust manifold lower cover (RH) and the exhaust manifold cover (LH).

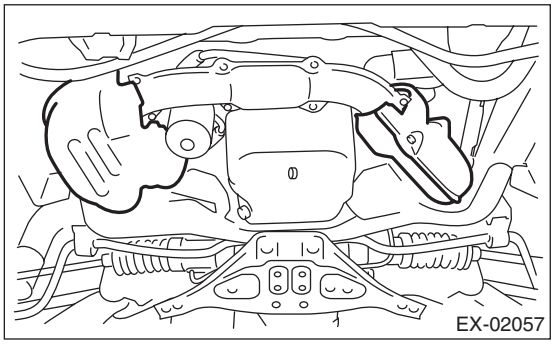

6) Remove the bolts and nuts which hold front exhaust pipe assembly to the turbocharger joint pipe.
7) While holding the front exhaust pipe assembly with one hand, remove the nuts which hold the front exhaust pipe assembly to cylinder head exhaust port.

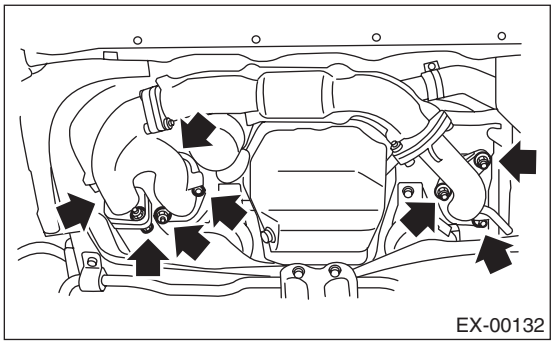

8) Remove the front exhaust pipe assembly.
9) Remove the covers from exhaust manifold and front exhaust pipe.
10) Separate the front exhaust pipe from exhaust manifolds.

- Except for STI model

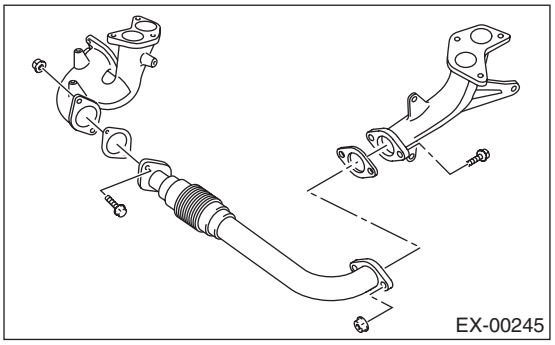

- STI model

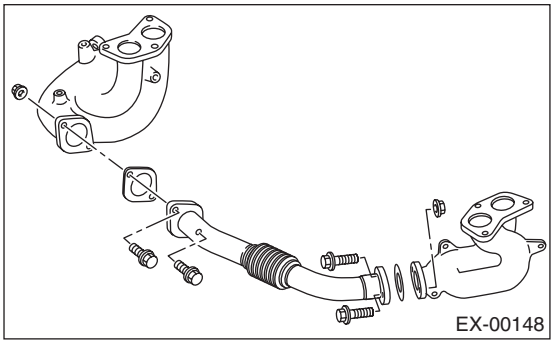

B: INSTALLATION

1) Install the front exhaust pipe and the exhaust manifold.

NOTE:
Use a new gasket.

Tightening torque:
35 N·m (3.6 kgf-m, 26 ft-lb)

- Except for STI model

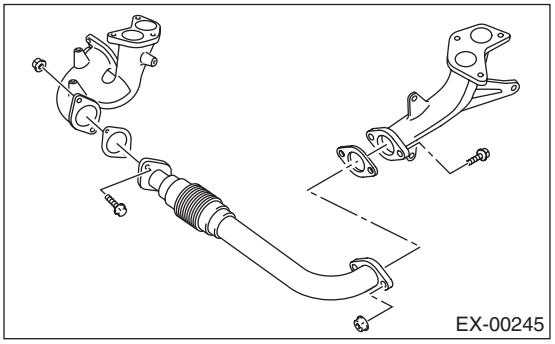

- STI model

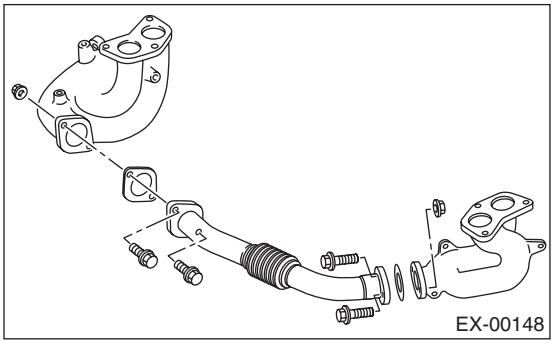

2) Install the front exhaust pipe cover.

Tightening torque:
Except for STI model
7.5 N·m (0.8 kgf-m, 5.5 ft-lb)
STI model
25 N·m (2.5 kgf-m, 18.1 ft-lb)

3) Install the exhaust manifold upper cover (RH).

Tightening torque:
19 N·m (1.9 kgf-m, 14.0 ft-lb)

4) Install the front exhaust pipe assembly.

NOTE:
Use a new gasket.

Tightening torque:
35 N·m (3.6 kgf-m, 26 ft-lb)

5) Connect the exhaust manifold (RH) to turbo-charger joint pipe.

NOTE:
Use a new gasket.

- Except for STI model

Tightening torque:
T1: 35 N·m (3.6 kgf-m, 26 ft-lb)
T2: 40 N·m (4 kgf-m, 28.9 ft-lb)

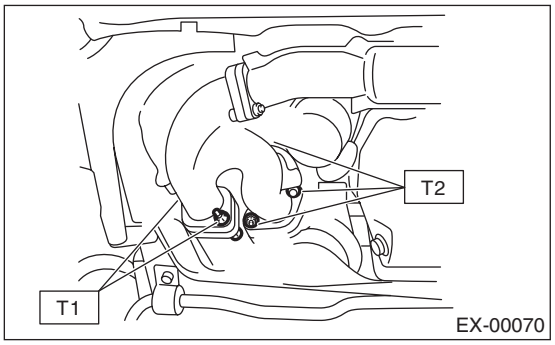

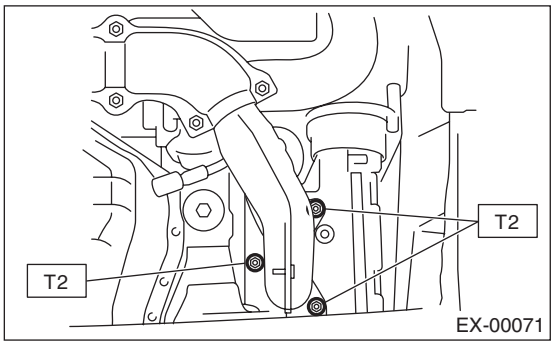

- STI model

Tightening torque:
35 N·m (3.6 kgf-m, 26 ft-lb)

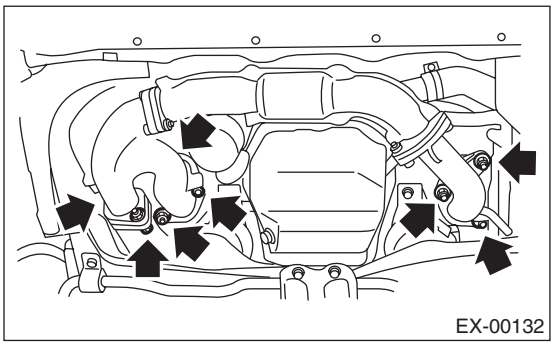

6) Install the exhaust manifold lower cover (RH) and the exhaust manifold cover (LH).

Tightening torque:
19 N·m (1.9 kgf-m, 14.0 ft-lb)

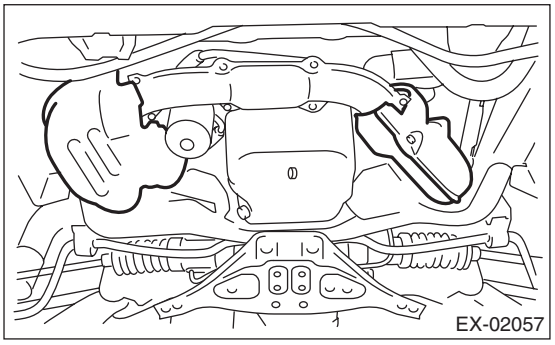

7) Install the front oxygen (A/F) sensor. <Ref. to FU(H4DOTC)-46, INSTALLATION, Front Oxygen (A/F) Sensor.>
8) Install the under cover.
9) Connect the ground cable to the battery.

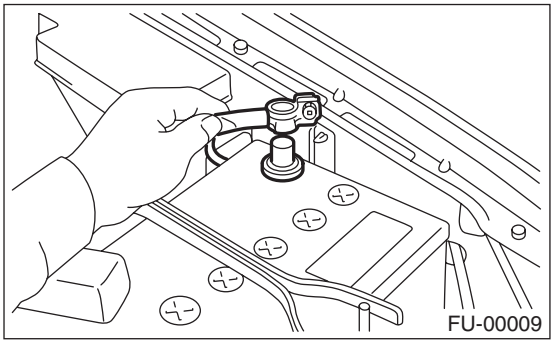

C: INSPECTION

1) Check the connections and welds for exhaust leaks.
2) Make sure there are no holes or rusting.